Fuji Electric

Innovating Energy Technology

INFRARED CONTINUOUS GAS ANALYZER

Fuji's unique and innovative single-beam NDIR analyzer design achieves 0-5ppm.

- **Excellent Stability: Zero drift ±0.5% FS/ week or better (ZPB and ZPG)**
- **Simultaneous and continuous measurement of up to 5 gas components (ZPA and ZPB)**
- **Compact and lightweight: 130 (H) x 483 (W) x (D) mm, 11 kg or less**
- **Unique measurement cell design reduces maintenance**
- **Atmospheric pressure compensation simplifies correction for atmospheric and altitude pressure variations**
- **Built-in paramagnetic or fuel cell oxygen sensor available**

< Minimum measurement range >

Measurable components	General use model (ZPA)	High Performance model (ZPB)	Ultra Low-concentration measurement (ZPG)
NO	0~200ppm	0~50ppm	0~10ppm
SO_2	0~200ppm	0~50ppm	0~10ppm
CO_2	0~100ppm	0~50ppm	0~5ppm
CO	0~200ppm	0~50ppm	0~5ppm
CH_4	0~500ppm	–	–
O_2	0~5%	0~5%	0~5%

21C1-E-0012

General use model Type: ZPA

Simultaneous and continuous measurement of up to 5 gas components

Measurement range (min...max)

NO: 0~200ppm 5000ppm
SO_2: 0~200ppm.....10vol%
CO_2: 0~100ppm.....100vol%
CO: 0~200ppm 100vol%
CH_4: 0~500ppm.....100vol%
O_2: 0~5vol%.....100vol%
(Note: single component O_2 analyzer is available with 100 to 95% reverse range)

- Output signal hold
- Range switching (manual/automatic)
- Atmospheric pressure correction
- RS-485 communication
- Auto calibration
- Auto calibration remote start
- Auto calibration in progress contact output
- CO peak alarm output
- Calibration error contact output
- Range identification contact output
- Upper/lower limit alarm contact output
- O_2 correction output
- O_2 correction average value output
- O_2 average value output
- Average value reset contact input
- Instrument failure contact output

- High-accuracy measurement with repeatability of ±0.5 % FS or less
- Multi layer detectors enable minimal interference caused by co-existence gases
- Built-in paramagnetic O_2 sensor or fuel cell O_2 sensor available
- Less affected by pressure variations with atmospheric pressure correction (option)

Excellent long term stability, easy maintenance, and high-precision measurement with repeatability of 0.5%

Principle The amount of infrared ray absorbed in the measuring cell is detected with the mass flow sensor.

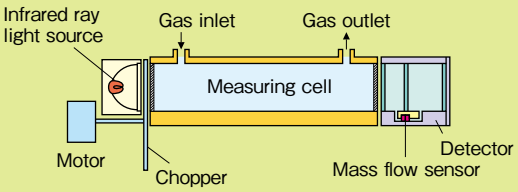

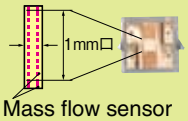

Mass flow sensor (Hot-wire sensor)

<Mass flow sensor>
The mass flow sensor, with low impedance, has excellent noise resistance, while the sensor, with no movable parts, is impervious to vibration and can be used on a semi-permanent basis.

Zero/span auto calibration function (option) eliminates manual calibration work.

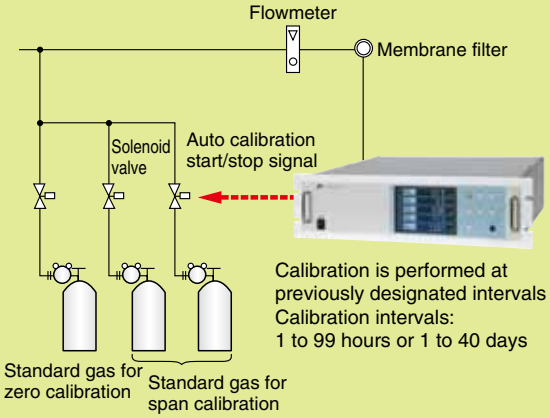

Calibration is performed at previously designated intervals
Calibration intervals:
1 to 99 hours or 1 to 40 days

Less affected by pressure variations with barometric pressure correction (option)

Correction for atmospheric and altitude pressure variations

Examples of applications

- Heat treatment furnace
- Biomass
- Refuse incinerator
- Storage of fruits

High performance Type: ZPB

Excellent long term stability! Simultaneous and continuous measurement of up to 5 gas components

Zero point drift ±0.5% FS/week

Measurement range (min...max)

NO: 0~50ppm 5000ppm
SO_2: 0~50ppm.....5000ppm
CO_2: 0~50ppm.....25vol%
CO: 0~50ppm 5000ppm
O_2: 0~5vol%.....100vol%

Principle of the sample switching system

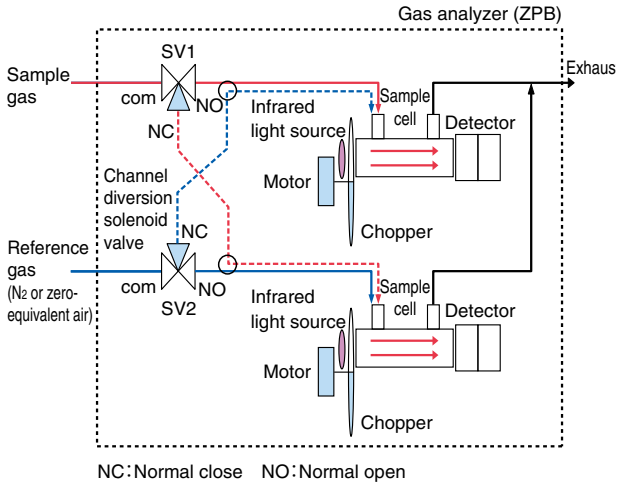

This product uses the sample switching system and state-of-the-art signal processing, allowing for stable low-concentration measurements.

Sampling system

When a lot of moisture is contained in the sample gas such as a combustion exhaust gas (saturated at 2°C or more)

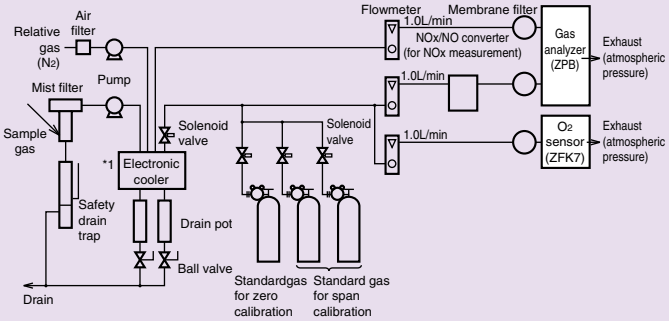

*1) With an electronic cooler, dehumidify to 5°C or less so that the water concentration is equal at the reference and sample sides.
*2) The NO_2/NO converter is used for Nox measurement.

Examples of applications

- Refuse incinerator
- Thermal power generation boiler

Common characteristic between model ZPB and ZPG

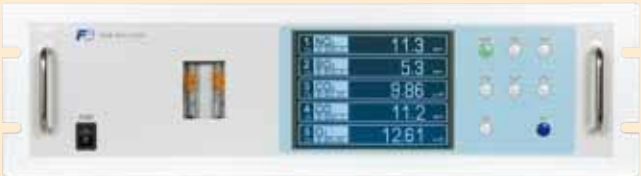

(Model: ZPB)

(Model: ZPG)

- Excellent long term stability with the sample switching system: ±0.5% FS/week or less (Zero point drift)
- Multi layer detectors enable minimal interferences caused by co-existence gases
- Built-in paramagnetic or fuel cell oxygen sensor available
- Less affected by pressure variations with atmospheric pressure correction available

Minimal interferences caused by other gases

Our unique sampling switching system and improved multi layer detector minimizes interference caused by other gases in the sample gas.

The sample switching system cancels gases having components causing the same level of interference as the reference gas (such as water). As for other components, the improved detector and measurement unit configuration has reduced interference caused by other gases.

- Output signal hold
- Range switching (manual/automatic)
- Calibration error contact output
- Range identification contact output

Ultra Low-concentration measurement Type: ZPG

Low-concentration gas continuous measurement [measurement of two components (including O_2)]

0 to 5 ppm

Measurement range (min...max)

NO: 0~10ppm 100ppm
SO_2: 0~10ppm 100ppm
CO_2: 0~5ppm 50ppm
CO: 0~5ppm 50ppm
O_2: 0~5vol% 100vol%

Principle of the sample switching system

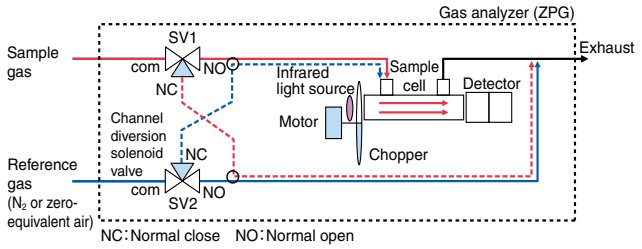

This product uses the sample switching system and state-of-the-art signal processing, allowing for stable low-concentration measurements.

Sampling system

When the concentration of impurities in the gas is measured (the reference gas is not needed)

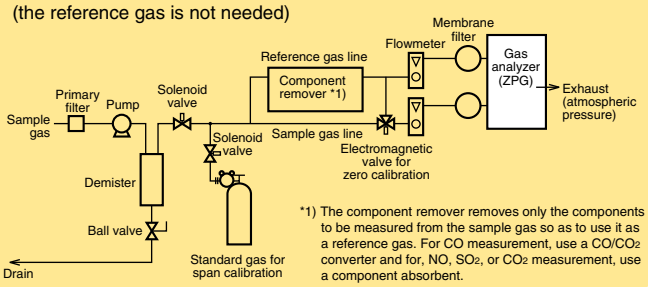

*1) The component remover removes only the components to be measured from the sample gas so as to use it as a reference gas. For CO measurement, use a CO/CO_2 converter and for, NO, SO_2, or CO_2 measurement, use a component absorbent.

Example of applications

Continuous measurement of low-impurity gas (CO and CO_2) from air separators

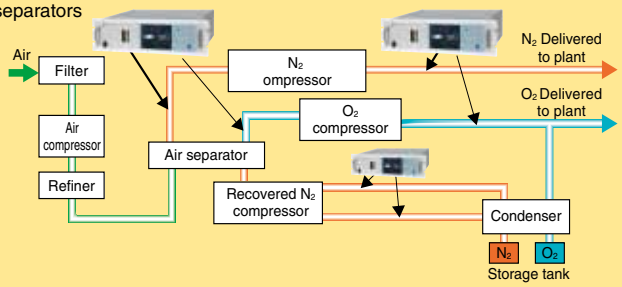

Principle of the sample switching system

The sample switching system uses a built-in solenoid valve ("SOLV") to introduce a sample gas and a reference gas equivalent to the zero gas alternately at certain intervals (10 seconds). Measuring these gases alternately makes it possible to compensete the zero point during measurement. The above figure shows the drift-less mechanism. The "component corresponding to the concentration" is used as a measured value. The shaded area represents the zero drift component of output. This area is nearly eliminate by sample switching the zero reference gas.

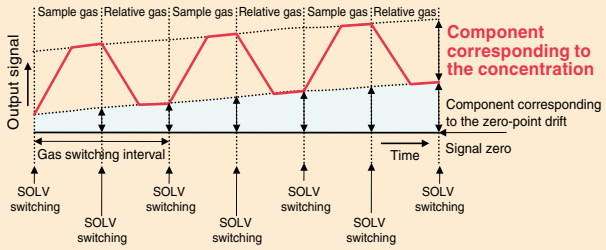

■ Less affected by pressure variations with barometric pressure correction (option)

Correction for atmospheric and altitude pressure variations

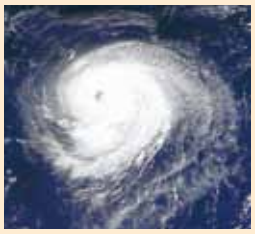

Atmospheric pressure correction	RS-485 communication	Auto calibration	Auto calibration remote start	Auto calibration in progress contact output	CO peak alarm output
Upper/lower limit alarm contact output	O_2 correction output	O_2 correction average value output	O_2 average value output	Average value reset contact input	Instrument failure contact output

Major specifications

Type	General use model		High performance model		Ultra Low-concentration measurement	
Exterior						
Basic type	ZPA		ZPB		ZPG	
Measurement principle	Non-dispersive infrared gas analyzer (single-beam), Oxygen sensor: paramagnetic type, fuel cell type or external zirconia type					
Number of components that can be measured	Up to 5 components (including O_2)				Up to 2 components (including O_2)	
Measurable component and range	Minimum range	Maximum range	Minimum range	Maximum range	Minimum range	Maximum range
NO	0~200ppm	0~5000ppm	0~50ppm	0~5000ppm	0~10ppm	0~100ppm
SO_2	0~200ppm	0~10vol%	0~50ppm	0~5000ppm	0~10ppm	0~100ppm
CO_2	0~100ppm	0~100vol%	0~50ppm	0~25vol%	0~5ppm	0~50ppm
CO	0~200ppm	0~100vol%	0~50ppm	0~5000ppm	0~5ppm	0~50ppm
CH_4	0~500ppm	0~100vol%	-	-	-	-
O_2 (Built-in fuel cell)	0~10vol%	0~25vol%	0~10vol%	0~25vol%	0~10vol%	0~25vol%
O_2 (Built-in paramagnetic)	0~5vol%	0~100vol%	0~5vol%	0~100vol%	0~5vol%	0~100vol%
	Not equipped	100~95vol%	-	-	-	-
O_2 (External zirconia)	0~5vol%	0~25vol%	0~5vol%	0~25vol%	0~5vol%	0~25vol%
Number of measurement ranges	Up to 2 ranges for each component					
Repeatability	Within ±0.5%FS					
Linearity	Within ±1%FS					
Zero drift	Within ±2%FS/week (Partly use auto zero cal)		Within repeatability/week			
Span drift	Within ±2%FS/week		Within ±2%FS/week			
Response time (Within 90%)	Within 10 to 30 sec (depending on measurement range)		Within 30 sec (T_{90}) (Depending on the gas switching timing of sample switching operation. (Td = 5 to 20 seconds))			
Analog output signal	4 to 20 mA or 0 to 1 VDC (Insulated from the ground and internal circuitry, not insulated between the output lines) Output for each reading displayed.					
Display	LCD with backlight (Japanese, English, or Chinese: Depends on which language is selected.) Instantaneous value, instantaneous O_2-equivalent value, average O_2-equivalent value, average O_2 value					
Range switching	Manual switching by key operation, automatic switching, or remote switching by external contact input (option)					
Contact output function (option)	Voltage input contact (application of 12 to 24 VDC, maximum current: 15 mA) Remote range switching, auto calibration start, remote hold, average value reset					
Contact output (option)	1c relay contact (contact capacity: 24 VDC/1 A, resistance load) Instrument failure, calibration error, range identification, auto calibration in progress, solenoid valve drive for automatic calibration, upper/lower limit alarm, CO peak alarm					
Atmospheric pressure correction (option)	Built-in if required.					
Standard function	Output signal hold, manual/automatic range switching					
Optional function	Auto calibration, auto calibration remote start, remote output hold, range identification contact output, upper/lower alarm output, O_2-equivalent value output, average O_2-equivalent value output, average value reset contact input, CO peak alarm contact output					
Communication function (option)	RS-485 (Modbus) (9-pin D-sub output) Semi-dual bit serial, start/stop synchronization					
Sample gas flow rate checker	Not equipped		Equipped			
Gas inlet/outlet size	Rc1/4 or NPT1/4 female thread					
Purge gas flow rate	1L/min (Perform purging when necessary.)					
Reference gas	Not needed		Needed (dry N_2 or dry air)			
Ambient temperature/humidity	–20°C to 60°C, 90%RH or lower (No condensation allowed.)					
Mounting method	19” rack mount					
Power supply voltage	100 to 240 VAC, 50/60 Hz					
Power consumption	Approximately 100 VA		Approximately 120 VA		Approximately 100 VA	
Outside dimension	133 (H) × 483 (W) × 382 (D) mm					
Mass	Approximately 11 kg		Approximately 13 kg		Approximately 11 kg	
Applicable standard	CE mark					

[Sample gas conditions]

Flow rate	0.5L/min±0.2L/min	1.0L/min±0.2L/min
Temperature	0°C to 50°C	
Pressure	10 kPa or less (Must be open to the atmosphere at the gas outlet side)	
Dust	100 μg/Nm^3 or lower (Particle size: 0.3 μm or smaller)	
Mist	Not allowed.	
Moisture	Saturation at room temperature or lower (No condensation allowed.) 0 to 200 ppm. For CO, NO, and SO_2 analyzer: Saturation at 2°C or lower	Saturation at 2°C or lower (The saturation temperature of the sample gas must be the same as that of the reference gas.)
Anti-corrosive component	1 ppm or less	

Items to be delivered

- A set of gas analyzers
- Spare fuse (AC250V/2A Delay type) 2 pcs
- Operation manual
- A set of connectors for input/output connections
- For power inlet: Power cable (inlet type 2 m) 1pc

What to specify at the time of order placement

1. Code symbols
2. Application and components of gases to be measured

Outline diagram (Unit: mm)

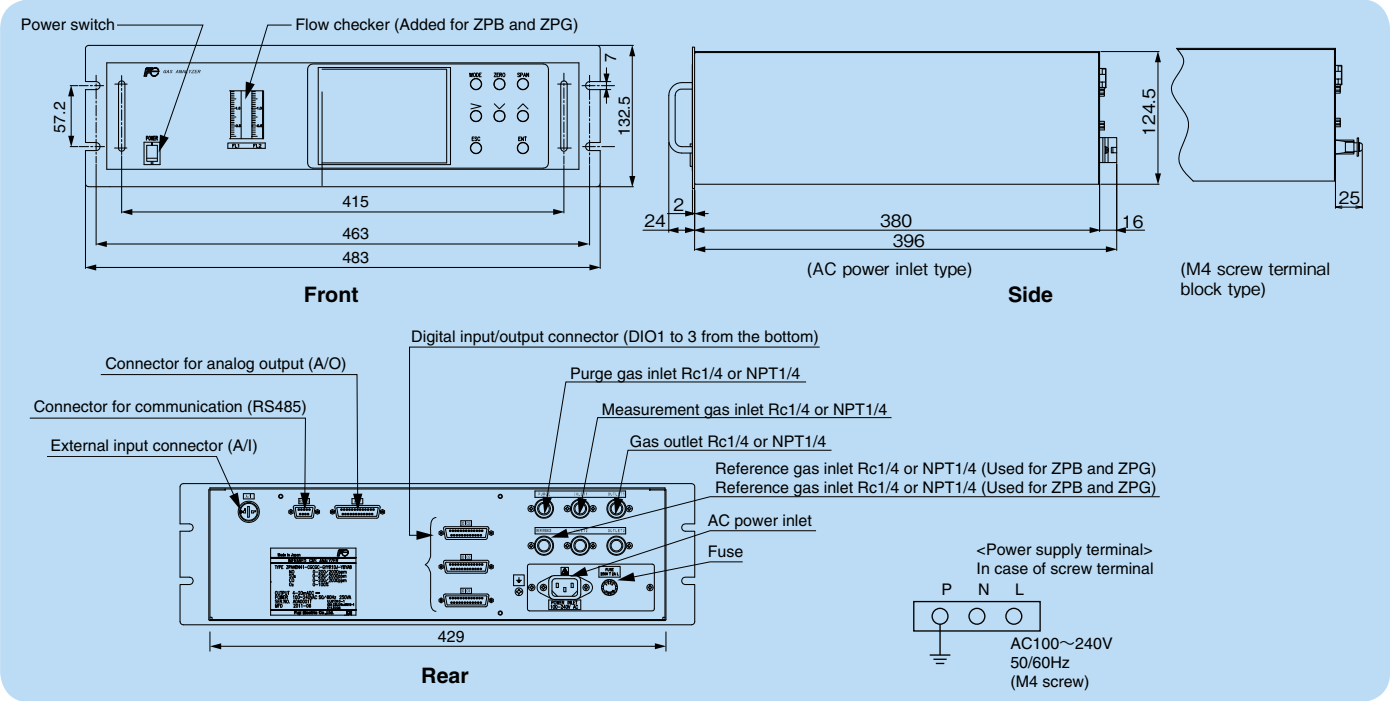

Major gas sampling equipment

Easy installation to equipment

$NO_2 \rightarrow NO$ gas converter (Type: ZDLO4)

- Target gas: Exhaust gas from general boilers, atmosphere
- Catalyst usage: 2 cm^3
- Catalyst replacement interval: Approximately 1 year
- Flow rate of the gas to be analyzed: 0.5 L/min or lower
- Conversion efficiency: 90% or higher (conforming to JIS)
- Temperature control: Built in
- Power supply voltage: 100 to 240 VAC, 50/60 Hz
- External dimensions: 212(H)x148(W)x130(D) mm

Zirconia oxygen sensor (Type: ZFK7)

- Measurement range: 0 to 25%
- Repeatability: Within ±0.5% of full scale
- Zero drift: Within ±1% of full scale/week
- Span drift: Within ±2% of full scale/week
- Response time: Approximately 20 sec (90% response)
- Temperature control: Built in
- Oxygen concentration display: Displayed on the gas analyzer connected
- Flow rate of the gas measured: 0.5±0.25 L/min
- Power supply voltage: 100 to 115 VAC, 50/60 Hz
- External dimensions: 140(H)x170(W)x190(D) mm

Gas extractor applicable up to 1300°C

(Type: ZBAK2)

- System: Electrical heating
- Maximum temperature of the gas used: 800°C or 1300°C
- Material of the gas-contacting area: SUS316, Viton
- Extractor material: SUS316 or SiC
- Mounting method: Flange
- Sample gas outlet: Rc1/2
- Filter: SUS316 wire mesh (40 μm)
- Power supply voltage: 100 VAC, 50/60 Hz, 100 VA

Electronic gas cooler

(Type: ZBC91.....1-channel)
(Type: ZBC92.....2-channels)

- Fixed dehumidification flow rate (Max.): 1.5 L/min
- Inlet gas temperature: 40°C or lower
- Output gas dew point: 0.5°C to 3°C
- Pressure: 50 kPa (Max.)
- Power supply voltage: 100 VAC, 50/60 Hz
- Gas outlet/inlet: Rc1/4
- Dehumidification check function: With check terminal
- External dimensions: 250(H)x200(W)x167(D) mm

Fuji Electric Co., Ltd.

International Sales Div.
Sales Group
Gate City Ohsaki, East Tower, 11-2, Osaki 1-chome,
Shinagawa-ku, Tokyo 141-0032, Japan
http://www.fujielectric.com
Phone: 81-3-5435-7280, 7281 Fax: 81-3-5435-7425
http://www.fujielectric.com/products/instruments/

Printed in Japan 2014-2/20FOLS