Fuji Electric

THERMAL CONDUCTIVITY GAS ANALYZER <THERMOMAT>

DATA SHEET

ZAF-4

Thermal conductivity gas analyzer is a gas analyzer which quantitatively measures gas concentration by utilizing a causal relationship that the temperature of a heated platinum wire changes with gas concentration.
The analyzer continuously measures the concentration of gases such as H_2, He, and Ar with high stability.

FEATURES

1. Easy-to-see large LCD is helpful for efficient operation.
2. Measured value is output as a linearized output signal.
3. Line voltage lies within 100 V to 240 V AC, 50/60 Hz.
4. External dimensions are the same as those of the preceding type.
5. Zero point and span can be automatically calibrated (at option).
6. Other gases' interference is correctable (at option).
7. Communicable with other system through an RS-232C interface (MODBUS™)(at option).

SPECIFICATIONS

Standard Specifications

Measuring principle:
Measurement of thermal conductivity

Measurable component:
He, Ar, H_2, CH_4, CO_2

Measurable range:
Refer to Table 1

Output signal: 4 to 20 mA DC, 0 to 1 V DC, 0 to 10 mV DC
Isolated output
(Any one-output signal specifiable in CODE SYMBOLS)

Allowable load resistance:
550 Ω max. (in 4 to 20 mA DC output)

Output resistance:
100 kΩ (in 0 to 1 V DC or 0 to 10 mV DC output)

Display unit: LCD with backlight

Display of measured value:
Max. 4 digits

Display language:
English

Output signal holding:
In both manual and automatic calibrations, output value just before calibration can be held.

Power supply: 100 to 240 V AC, 50/60 Hz

Power consumption:
Approx. 50 VA

Warm-up time: At least 30 min

Ambient temperature:
–5 to 45˚C

Ambient humidity:
Less than 90% RH (condensation unallowable)

Storage conditions:
–20 to 60˚C, less than 95% RH (condensation unallowable)

Mounting: Flush mounting on panel

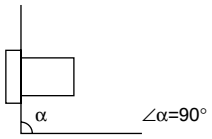

External dimensions (H x W x D):
240 x 192 x 213 mm

Mass: Approx. 5 kg

Finish color: Off-white (equivalent to 10Y7.5/0.5)

Housing: Steel-plate case, indoor use type

Material of gas-contacting parts:
JIS SUS304, platinum, platinum iridium, silver, fluororubber, epoxy resin, nickel, tin

Gas inlet/outlet, purge port:
Rc1/4 or NPT1/4 (whichever specified)

External connection terminal:
M3.5 screw terminal (9-pin D-sub connector for RS-232C)

Purge gas flow rate:
Approx. 1 L/min (for measurement of combustible gases)

Performance

Repeatability: ±1% of F.S.

Linearity: ±2% of F.S.

Drift: Zero point : within ± 2% of full scale/week (H_2 meter, reference gas N_2)
Span : within ± 2% of full scale/week (H_2 meter, reference gas N_2)

Response time (90% response):
High speed within 10 sec (at flow rate 1L/min), allowed only for H_2 meter (reference gas N_2, without interference compensation)
Standard within 60 sec (at flow rate 0.4 L/min)

Other gases' interference:
Indication error of each measured value (vol%)

Interference component	H_2 meter	CH_4 meter	Ar meter	CO_2 meter
H_2 1%	–	+5.8	–6.5	–8.0
CH_4 1%	+0.17	–	–1.15	–1.38
SO_2 1%	–0.31	–1.8	+2.1	+2.5
Ar 1%	–0.15	–0.87	–	+1.2
CO_2 1%	–0.125	–0.725	+0.83	–
O_2 1%	+0.019	+0.11	–0.125	–0.15
H_2O 1.5°C saturation	–	–	–	–0.56

Standard Gas Measurement Conditions

Temperature: 0 to 50°C
Gas flow rate: Constant at 0.4 ± 0.05 L/min
Constant at 1 ± 0.05 L/min(High responce)
Dust: Less than 100 μg/Nm^3 with a particle size of 0.3 μm max
Pressure: 10 kPa max
Mist: Unallowable
Oxygen gas: No oxygen should be contained in measured combustible gases.
Moisture: Below saturation at 2°C
Corrosive gas: Unallowable
Standard gases for calibration:
Zero gas : same as reference gas or as specified
Span gas : Concentration within 90 to 100% of measuring range (Positive range)
Concentration beyond 100% is inapplicable

Installation Conditions

- The analyzer should not be exposed to direct sunlight or radiation from a hot object.
- A place subjected to heavy vibrations should be avoided. A location with clean atmosphere should be selected.
- Before measuring combustible gases, the existing gases should be purged from the analyzer using air or N_2.
- When the analyzer is installed outdoors, it should be sheltered with a housing or cover to protect it from rain and wind.

Optional Specifications

Relay contact output:
5 SPST relay contact outputs
Relay contact capacity; 220 V AC/2 A (resistive load)
Isolated with relay between contacts, and between contacts and internal circuit.
Max. 5 points are selectable among those listed below.
<1> Zero-side solenoid valve drive output for automatic calibration
<2> Span-side solenoid valve drive output for automatic calibration
<3> Suction pump OFF output in automatic calibration
(reray "ON" immediately after turnning on power supply)
<4> Upper limit (1 point) concentration alarm output
<5> Lower limit (1 point) concentration alarm output
<6> Upper/Lower limit (1 point) concen-tration alarm output
<7> Upper limit (1 point) and lower limit (1 point) concentration alarm output (Total 2 points)
<8> High-high limit (1 point at each step) concentration alarm output (Total 2 points)
<9> Low-low limit (1 point at each step) concentration alarm output (Total 2 points)
<10> Analyzer error or automatic calibration error alarm output
<11> Calibrating status output
<12> Range information output (only with 2-range meter)

Contact input: 3 non-voltage contact inputs
ON; 0 V, OFF; 5 V DC, current at ON; 5 mA
Isolated with photo coupler between inputs and internal circuit. Not isolated between contact inputs.
The following actions can be input
<1> Remote holding of measured value output
<2> Remote range changeover (only with 2-range meter)
<3> Remote start of automatic calibration

Interference gas measured value input:
Analog input for H_2 meter interference correction (1 to 5 V DC, 1 range)
Either CO_2 or CH_4 component of an external gas analyzer is to be input.
Adjustment is required at Fuji Electric's factory.
Details of measurement gas will be checked when receiving an order.

Automatic calibration function:
Zero and span calibrations are automatically carried out at the predetermined intervals.
Calibration gases are flowed sequentially by driving the externally installed solenoid valves.

Communicating function:

RS-232C (9-pin D-sub output)
Half duplex, asynchronous
MODBUS™ protocol, communication speed 9600 bps
Contents of communication:
Reading/writing of measured concentration values and various set values, and output of device status
Remarks: For connection in RS-485, RS-232C/RS-485 converter should be provided seperately

EC Directive Compliance

The product conforms to the requirements of the Low Voltage Directive 2006/95/EC and EMC directive 89/336/EEC (as amended by Directive 92/31/EEC), both as amended by Directive 93/68/EEC.
It conforms to following standards for product safety and electromagnetic compatibility ;

EN61010-1:2010,EN62311:2008
Safety requirements for electrical equipment for measurement, control and laboratory use.
"Installation Category II"
"Pollution Degree 2"
"Altitude up to 2187yard(2,000m)"
EN61326-1:2006, EN61326-2-3:2006,
EN61000-3-2:2006, A1:2009,A2:2009
EN61000-3-3:2008
Electrical equipment for measurement, control and laboratory use , EMC requirements.

CE

Explanation of Functions

Output signal holding	When holding is set (user setting is turned ON), the latest measured value output just before output signal holding will be held during manual or automatic calibration, or by remote output holding input. In this status, indicated values will not be held.
Remote output holding input	Upon short-circuiting the remote output holding input terminal when holding is set (user setting is turned ON), the latest measured value output will be held. Holding continues while the contact input terminal is close-circuited. In this period, indicated values will not be held.
Remote range changeover input	When remote range setting is selected (user setting is turned ON) for two rang type, range will be changed over according to the external signal input (non-voltage contact) applied to the remote range changeover input terminal. In this mode, range cannot be changed manually. When close-circuiting the contact input terminal, the first range is selected, and the second range is selected at open circuit.
Range identification signal output	With two rang type, the current measuring range identification is output in contact signal. The contact output terminal is closed for the first range, and open for the second range.
Automatic calibration	Zero and span calibrations are automatically carried out by outputting the signal for driving the externally installed solenoid valves for calibration gases at the set start time and interval or through input of the remote calibration start signal. • Calibration channel: 1 component • Calibration accuracy: ±0.2% of F.S. • Zero calibration point settable range: 0 to 100% of F.S. • Span calibration point settable range: 1 to 100% of F.S. • Calibration interval settable range: 1 to 99 hours (1 hour step) or 1 to 40 days (1 day step) • Calibration gas injection time settable range: 60 to 599 sec (in sec) • Calibration start: Internal timer or remote calibration start input • Solenoid valve drive signal output: SPST contact (zero x 1, span x 1) • Suction pump OFF output in calibration: SPST contact (suction pump OFF x 1) • Remote calibration start input: No-voltage contact input Automatic calibration is started by applying a non-voltage rectangular wave to the remote calibration start input terminal (opened after close-circuiting for 1.5 sec or longer). When contacts open, automatic calibration is carried out once. • Automatic calibration error alarm output: SPST contact Contacts close when the quantity of zero or span calibration exceeds 50% of full scale from the level of previous calibration, and contacts open when there is no abnormalities. When automatic calibration is abnormal, measurement output depends on the previous calibration values. • Automatic calibration status output: SPST contact During automatic calibration, contacts close, and open when within 50%.
Upper/lower limit, upper limit and lower limit alarm output	Alarm contact output is issued with reference to the set upper/lower limit for alarm. Hysteresis is settable. When measuring value exceed alarm setting value, contacts close, and open when not exceeded. SPST contact
Analyzer error	When the analyzer or automatic calibration is abnormal, contacts close, and open when normal. SPST contact
Interference correction by interference gas measured value input	Correction is made using either CO_2 or CH_4 component for H_2 measurement. Measured H_2 gas concentration is corrected in response to a concentration change of interference gas within its concentration range measured and set in advance. External interference gas measured value input : 1 to 5 V DC, 1range Interference gas fluctuation range : Reference concentration ± 20% F.S. H_2 gas concentration correcting range : Reference concentration ± 25% F.S. Correction accuracy : ±5% F.S. (Note 1) Enter in the sample gas component check list on the back cover. (Note 2) Correction accuracy value is larger when other interference gas is contained in the sample gas.

MEASURING PRINCIPLE

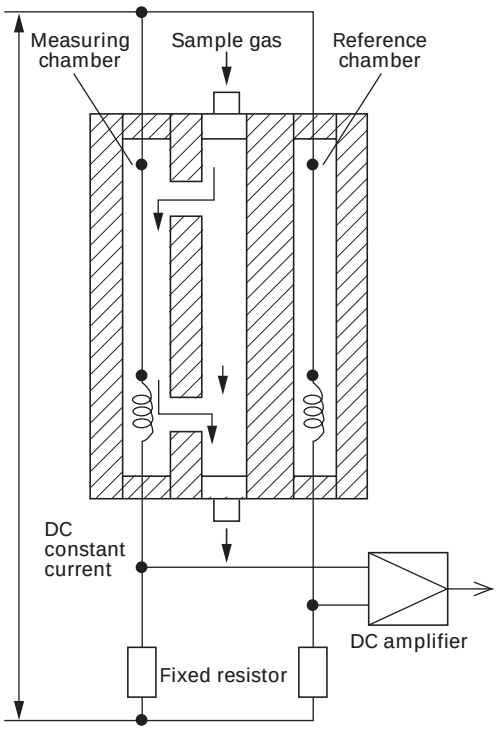

This thermal conductivity gas analyzer measures gas concentration by utilizing the different thermal conductivities of 2 gas components. In the detector, there are reference and measuring chambers in each of which a thin platinum wire is stretched. The reference chamber is filled with reference gas and through the measuring chamber, sample gas is flowed. Each platinum wire composes a bridge circuit in combination with an external fixed resistor, and it is heated by flowing a constant current. When there is a change in the concentration of the component under measurement, the thermal conductivity of sample gas will change to affect the temperature of the platinum wire in the measuring chamber. The resulting thermal change is taken out as a change in electric resistance, according to which the concentration of measured gas is calculated.

Thermal Conductivity Ratio of Gases

Gases		Comparative thermal conductivity (0°C) when replacing thermal conductivity of air (2.41×10^{-2} w/(m.k) with 1
Sulfur dioxide gas	SO_2	
Carbon dioxide gas	CO_2	
Argon	Ar	
Carbon monoxide	CO	
Steam (100°C)	H_2O	
Air		
Nitrogen	N_2	
Oxygen	O_2	
Methane	CH_4	
Hydrogen	H_2	

Table 1: Measurable Component and Measurable Range

Measured gas	Reference gas component (Note 1)	Measurable range	Range ratio(Note 2)
H_2	N_2, (CO_2, Ar, He)	0 to 3, 5, 10, 20, 50, 80, 100% 100 to 90, 100 to 80%	1 : 10
He	N_2, (CO_2, Ar) O_2, Air	0 to 5, 10, 20, 30, 40, 50, 80, 100% 100 to 90, 100 to 80%	1 : 10
Ar	N_2, O_2, Air, (He)	0 to 10, 20, 50, 80, 100% 100 to 90, 100 to 80%	1 : 5
CH_4	N_2, (CO_2, Ar, He)	0 to 20, 40, 50, 60, 80, 100% 100 to 80%	1 : 5
CO_2	N_2, O_2, Air, (He)	0 to 10, 20, 50, 100% 100 to 90, 80%	1 : 5

(Note 1) Contact us for the components in the parentheses. H_2 contained in O_2 cannot be measured.
(Note 2) Range ratio stands for maximum value.

GAS SAMPLING SYSTEM DIAGRAM (EXAMPLE)

● Example of gas measurement in industrial furnace, sintering furnace, etc.

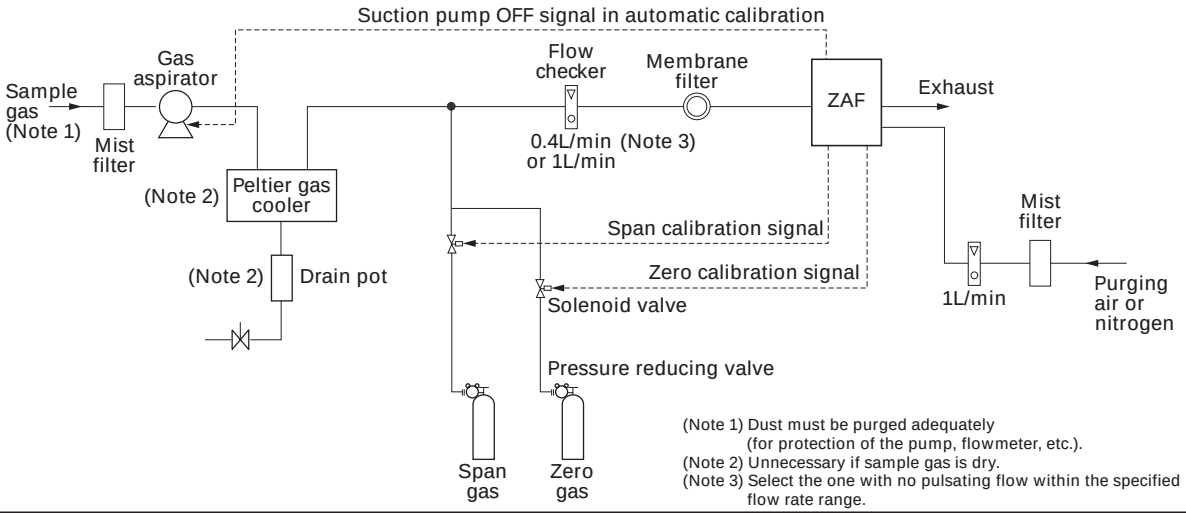

(Note 1) Dust must be purged adequately (for protection of the pump, flowmeter, etc.).
(Note 2) Unnecessary if sample gas is dry.
(Note 3) Select the one with no pulsating flow within the specified flow rate range.

CODE SYMBOLS

ZAF [4 5 6 7 8] – [9 10 11 12 13] – [14 15 16 17 18]

Digit	Description	Code
4	<Construction> Standard CEmark	3 4
5	<Measured component> H_2 Ar He CH_4 CO_2 (reference gas Ar unallowable) Other	K L M E A Z
6	<Reference gas> (Note 1) N_2 Air (incompatible with H_2/CH_4 measurement) O_2 (incompatible with H_2/CH_4 measurement) Other	4 5 6 Z
7	<Connection port size> Rc1/4 NPT1/4	0 1
8	<Revision No.>	4
9	<Measuring range (1st range)> 0 to 3% (H_2) 0 to 5% (H_2 ,He) 0 to 10% (H_2, He, Ar, CO_2) 0 to 20% 0 to 30% 0 to 50% 0 to 80% 0 to 100% 100 to 90% (H_2, He, Ar) 100 to 80% (H_2, He, Ar,CH_4) Other	Q L M N V P T J 9 8 Z
10	<Measuring range (2nd range)>(Note 2) None 0 to 5% (H_2 , He) 0 to 10% (H_2, He, Ar) 0 to 20% (H_2, He, Ar, CO_2) 0 to 30% 0 to 50% 0 to 80% 0 to 100% Other	Y L M N V P T J Z
11	<Measured value output> DC 4 to 20 mA DC 0 to 1V DC 4 to 20 mA + RS-232C communication DC 0 to 1 V + RS-232C communication DC 0 to 10mV	A B C D E
12	—	A
13	<H_2 meter interference corrective calculation> (Note 3) None Provided	Y A
14	<Input/output contacts> None Automatic calibration Concentration alarm Contact output selection See table below.	Y A C E
15	<Indication> Japanese English	J E
16	<Response speed> Standard response High-speed response (Note 4)	A B
17	—	Y
18	—	Y

(Note1) Referencegas refers to gas other than the component to be measured in sample gas.
("Z" must be specified when interference gas is to be contained.)
(Note 2) The ratio of maximum range to the first range is as given below.
For CO2, Ar or CH4 measurement :1st range x 5 (times)
For He or H2 measurement :1st range x 10 (times) A range from 0 to ...%
cannot be combined with that from 100 to ...%.
1st range < 2nd range

(Note 3) A CO2 or CH4 meter needs to be prepared separately.
A reverse range such as 100 to 0% cannot be specified.
Input signal is 1 to 5 V DC.
Adjustment is required at Fuji Electric,s factory.
Details of measurement gas will be checked when receiving an order.
Reverse range such as 100% to 0% cannot be specified.
Cannot be specified if high-speed response is selected.
(Note 4) High-speed response is for H2 meter used for reference gas N2 only.

Input/output contact specifications			14th digit : A Automatic calibration	14th digit : B Concentration alarm	14th digit : C Contact output selection (Note 7)
Contact output	Automatic calibration	Zero gas valve drive	○ (DO1)	—	○
		Span gasvalve drive	○ (DO2)	—	○
		Suction pump OFF in automatic calibration	● (DO3)	—	●
	Concentration alarm	Upper limit (1 point) concentration alarm	—	Any one alarm settable on screen (DO1, 2) 2 Point (NO) Contact	Any one alarm settable on screen 2 Point (NO) Contact
		Lower limit (1 point) concentration alarm	—		
		Upper/lower limit (1 point as a set) concentration alarm	—		
		Upper limit (1 point) and lower limit (1 point) concentration alarm	—		
		2-step upper limit (1 point each) concentration alarm	—		
		2-step lower limit (1 point each) concentration alarm	—		
	Other	Calibration status	○ (DO4)	○ (DO4)	○
		Range information (2-range meter) (Note 3)	—	○ (DO3)	○
		Analyzer error or automatic calibration error	○ (DO5)	○ (DO5)	○
Contact input	Remote automatic calibration start (Note 4)		○ (DI3)	○ (DI3)	○ (DI3)
	Remote range changeover (2-range meter) (Note 5)		○ (DI2)	○ (DI2)	○ (DI2)
	Remote measured value output holding (Note 6)		○ (DI1)	○ (DI1)	○ (DI1)

(Note 1) Mark ○ : Normally Open (NO) contact
(Note 2) Mark ● : Normally Closed (NC) contact,after turning on power supply
(Note 3) Low range : Contacts close, High range : Contacts open
(Note 4) When contacts open 1.5 sec after their closure, automatic calibration starts.
(Note 5) Contacts closed : Low range, Contacts open : High range
(Note 6) Contacts closed : Holding, Contacts open : Holding canceled
(Note 7) Up to 5 contact output points can be selected.

OUTLINE DIAGRAM (Unit : mm)

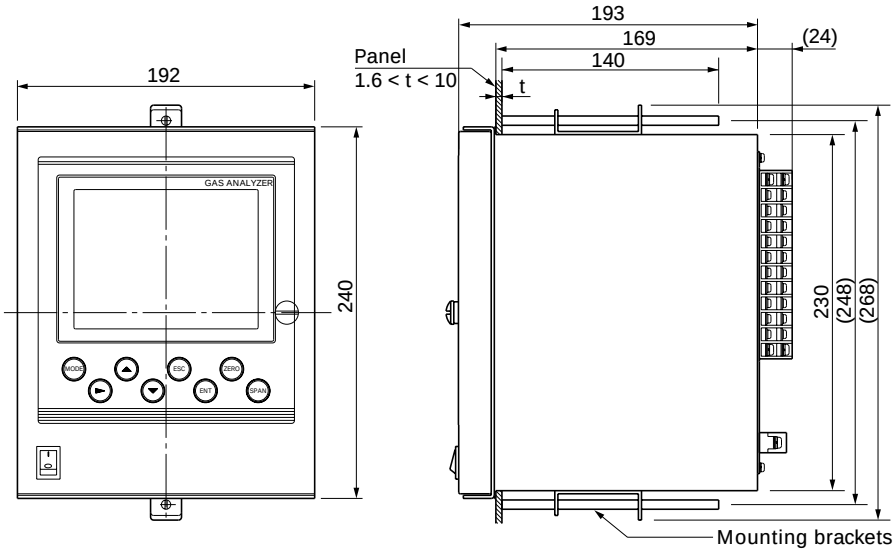

Front view

Side view

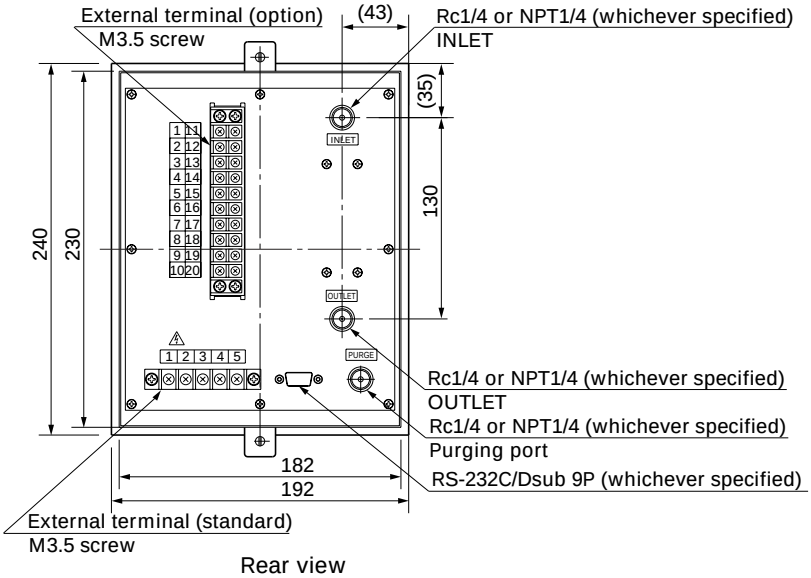

Rear view

Panel cutout

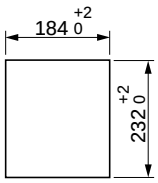

CONNECTION DIAGRAM

(Standard)

1	L	Power supply 100 to 240V AC, 50/60Hz
2	N	
3	E	Grounding terminal
4	+	Measured value output (as specified) 4 to 20mA DC, 0 to 1V DC, 0 to 10mV DC
5	–	

(M3.5 screw)

(Option) 13th digit A and 14th digit A, C, E,

		1	11	DO1
		2	12	DO1
Interference correcting input 1 to 5V DC	AIN+	3	13	DO2
	AIN–	4	14	DO2
Remote output holding	DI1	5	15	DO3
	DI1	6	16	DO3
Remote range changeover	DI2	7	17	DO4
	DI2	8	18	DO4
Remote automatic calibration start	DI3	9	19	DO5
	DI3	10	20	DO5

Contact output 1: DO1, DO1
Contact output 2: DO2, DO2
Contact output 3: DO3, DO3
Contact output 4: DO4, DO4
Contact output 5: DO5, DO5

(M3.5 screw)

Refer to “Input/output contact specifications” in CODE SYMBOLS.

SCOPE OF DELIVERY

Analyzer main unit
Panel mounting brackets (1 set)
2 power fuses (250 V AC, 1 A)
Instruction Manual

ITEMS TO BE PREPARED SEPARATELY

Gas sampling equipment, standard gas, receiving instrument, etc.
With interference corrective calculation: CH_4 or CO_2 gas analyzer

ORDERING INFORMATION

1. Analyzer type
2. Gas component to be measured
3. Measuring range
4. Gas component other than measured
   Very important information required to achieve intended accuracy of the instrument.
   (Enter in "Table for checiking sample gas component" on the next page.)

<Table for checking sample gas component of thermal conductivity gas analyzer (ZAF-4)>

Let us check your sample gas for safe use of Fuji Electric' gas analyzer.
Make entries where you can answer. If there is any question, contact our salesperson in charge of your company.
The analyzer may not provide full performance depending on other gas components contained in sample gas.

Date

Item	Description
Name of customer at delivery destination	
Application, purpose	
Gas component to be measured	

Sample gas		Minimum concentration (%)	Normal concentration (%)	Maximum concentration (%)	Remarks
Component to be measured					
Other component gas					
Other component gas					

Interference gas input	Measuring range	CO_2 meter or CH_4 meter
	0-	

Your question, etc.	

Customer information	Company name
	Section
	Address
	TEL
	Person in charge

Fuji Electric's salesperson in charge of your company _____

⚠ Caution on Safety

*Before using this product, be sure to read its instruction manual in advance.

Fuji Electric Co., Ltd.

International Sales Div
Sales Group
Gate City Ohsaki, East Tower, 11-2, Osaki 1-chome,
Shinagawa-ku, Tokyo 141-0032, Japan
http://www.fujielectric.com
Phone: 81-3-5435-7280, 7281 Fax: 81-3-5435-7425
http://www.fjielectric.com/products/instruments/

Printed in Japan